01_S3C6410(addr_data)
01_S3C6410(addr_data)

09_AC97
09_AC97

02_S3C6410(IO 1)
02_S3C6410(IO 1)

10_Power_JTAG
10_Power_JTAG

03_S3C6410(IO 2)
03_S3C6410(IO 2)

04_S3C6410(Power)
04_S3C6410(Power)

Mini6410

Ver:1041

Designed by FriendlyARM in Guangzhou

All rights reserved | http://www.arm9.net

广州友善之臂计算机科技有限公司

05_Memory
05_Memory

06_USB_UART_AD_BUTTONS_PWM_IR_I2C
06_USB_UART_AD_BUTTONS_PWM_IR_I2C

07_LCD_CMOS_GPIO_SD2
07_LCD_CMOS_GPIO_SD2

08_DM9000
08_DM9000

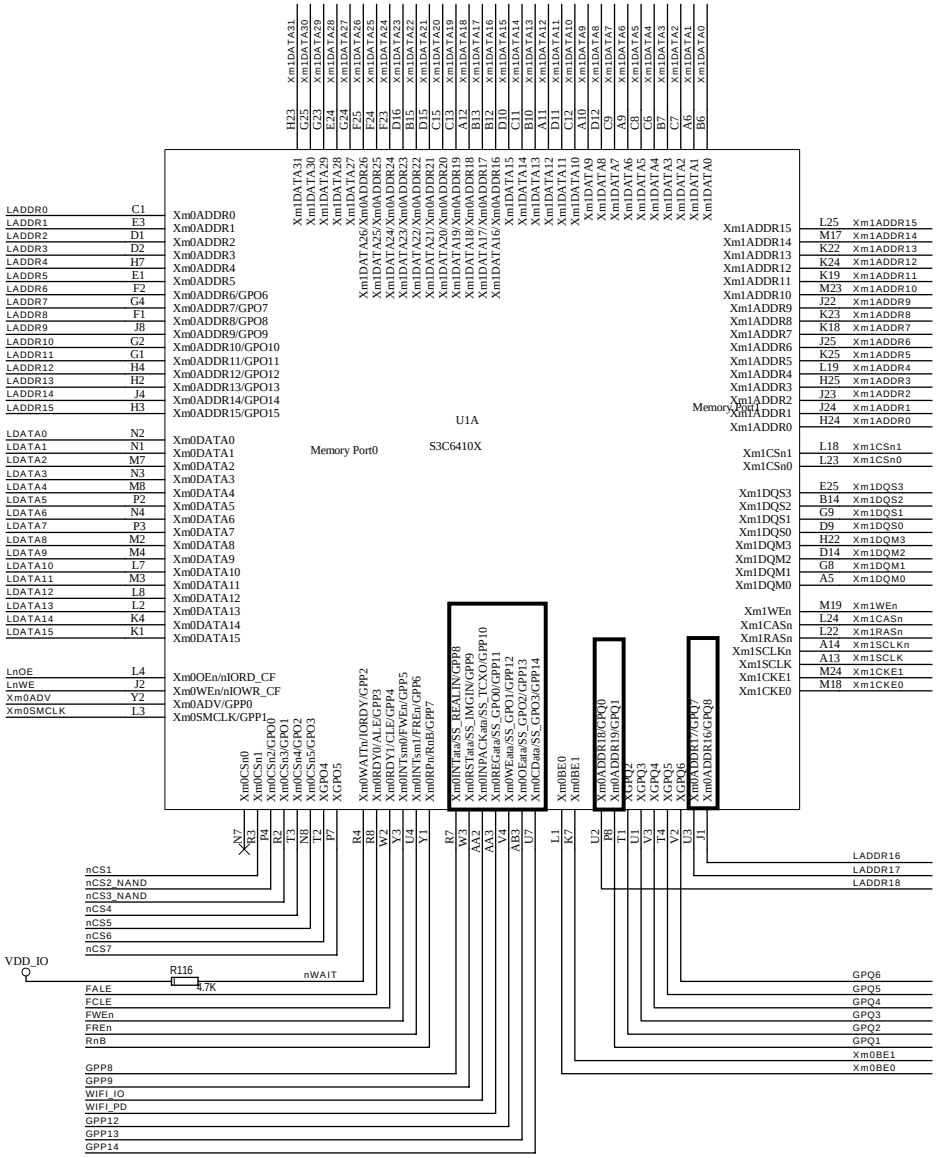

Designed by FriendlyARM in Guangzhou

All rights reserved | http://www.arm9.net

广州友善之臂计算机科技有限公司

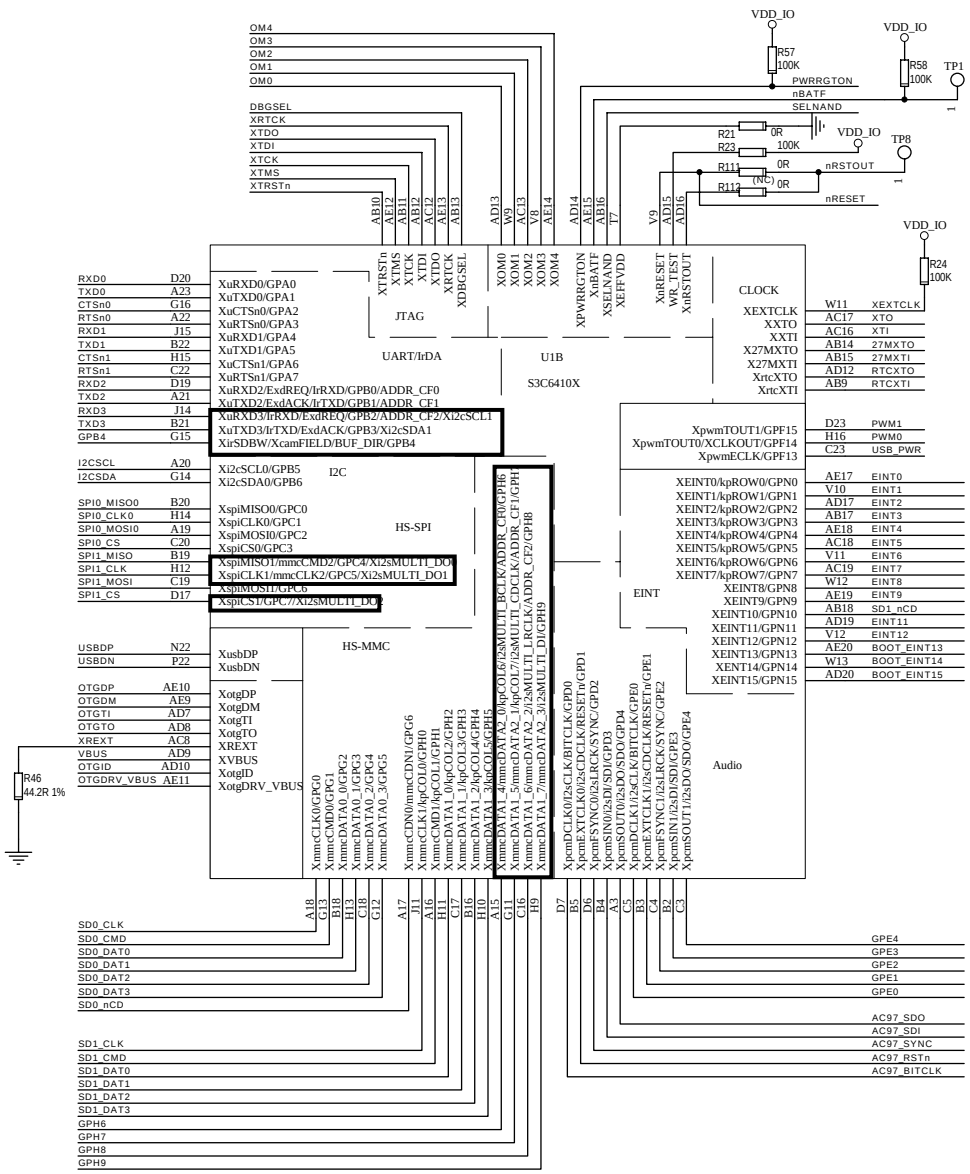

BOOTSET

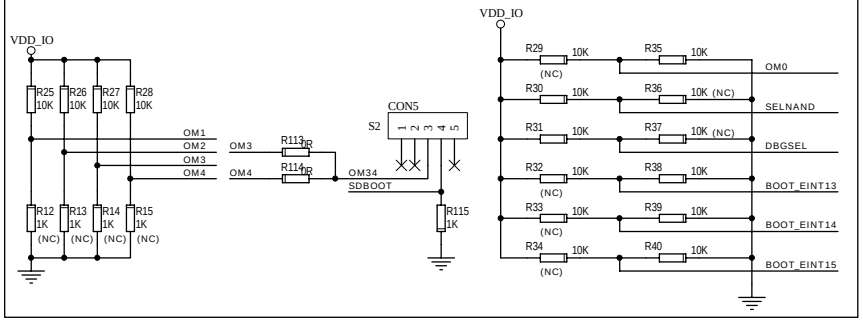

RESET

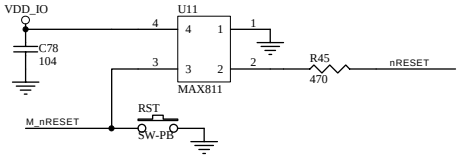

CLOCK SOURCE

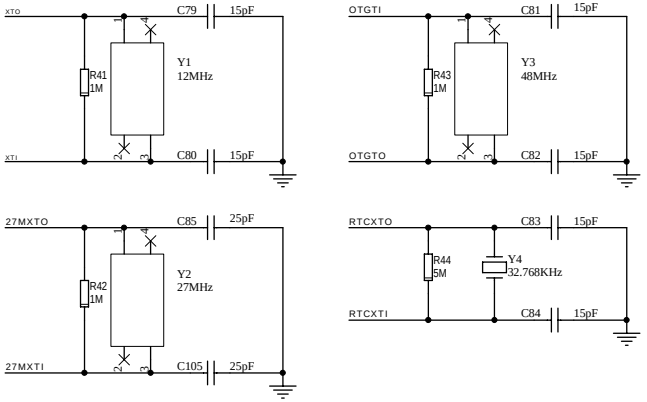

Designed by FriendlyARM in Guangzhou

All rights reserved | http://www.arm9.net

广州友善之臂计算机科技有限公司

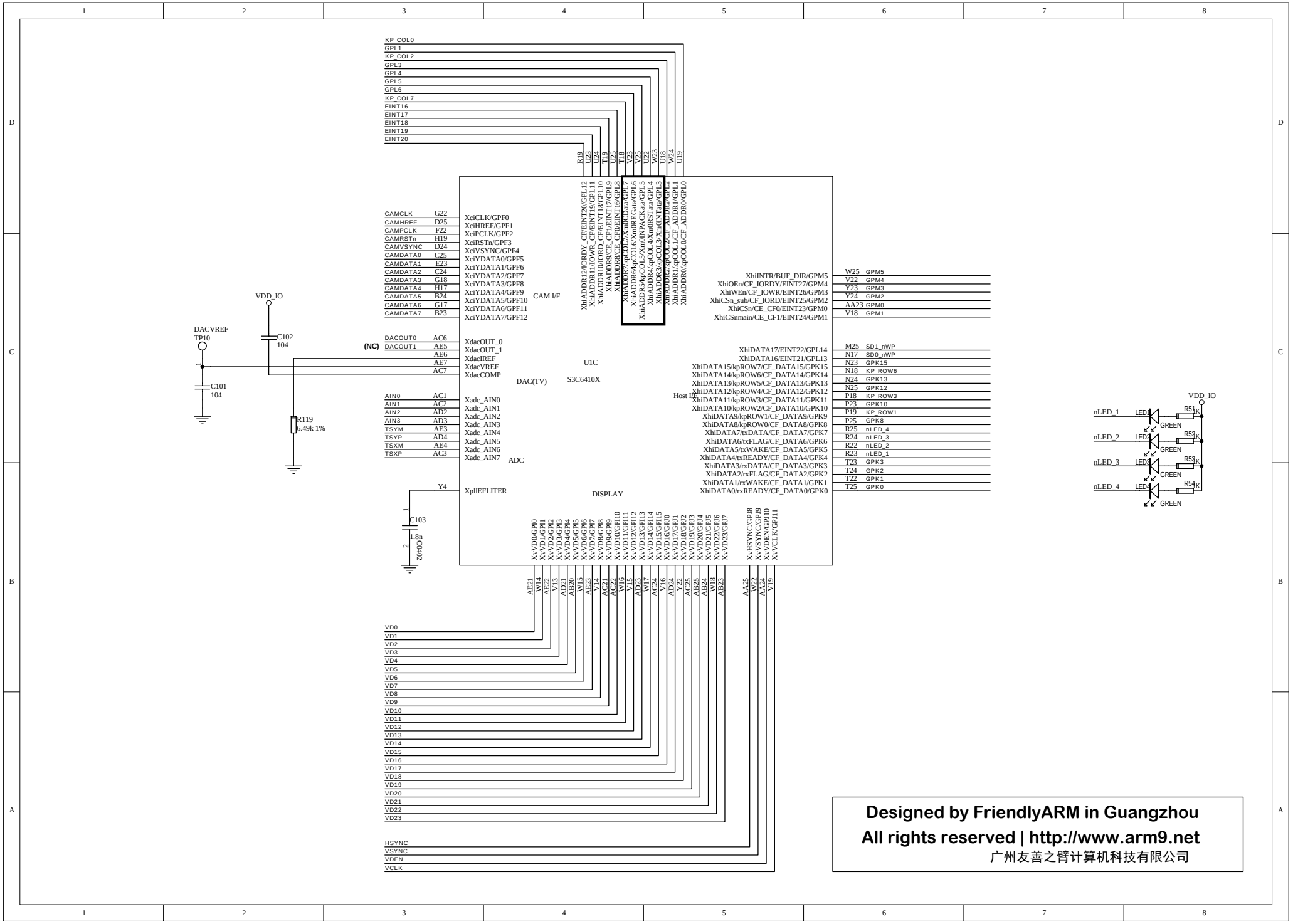

Designed by FriendlyARM in Guangzhou

All rights reserved | http://www.arm9.net

广州友善之臂计算机科技有限公司

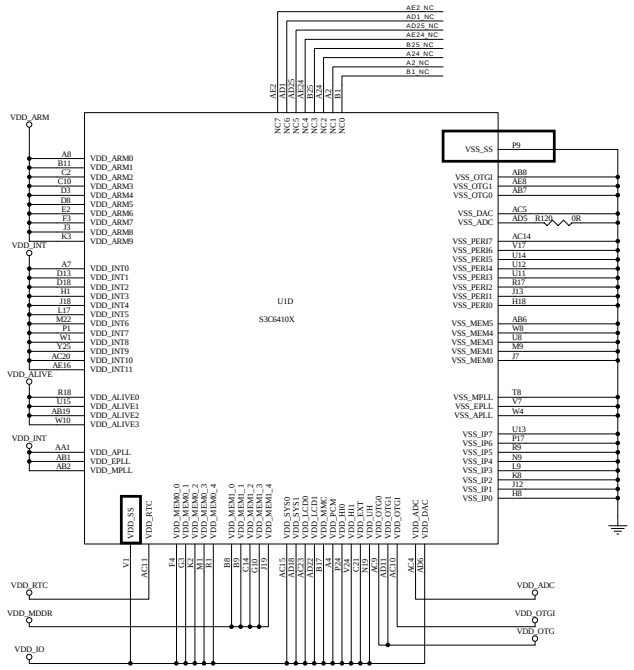

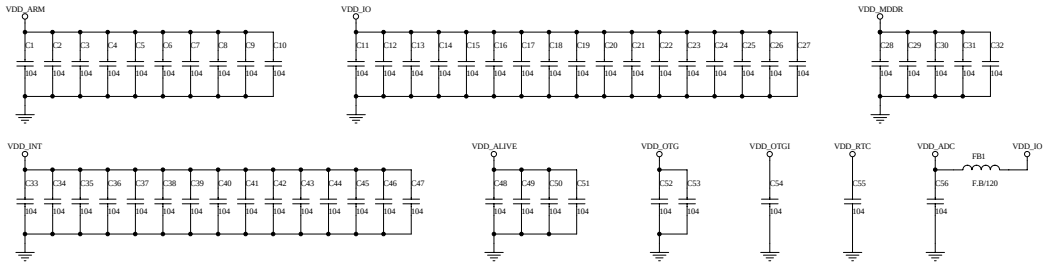

Designed by FriendlyARM in Guangzhou
All rights reserved | http://www.arm9.net
广州友善之臂计算机科技有限公司

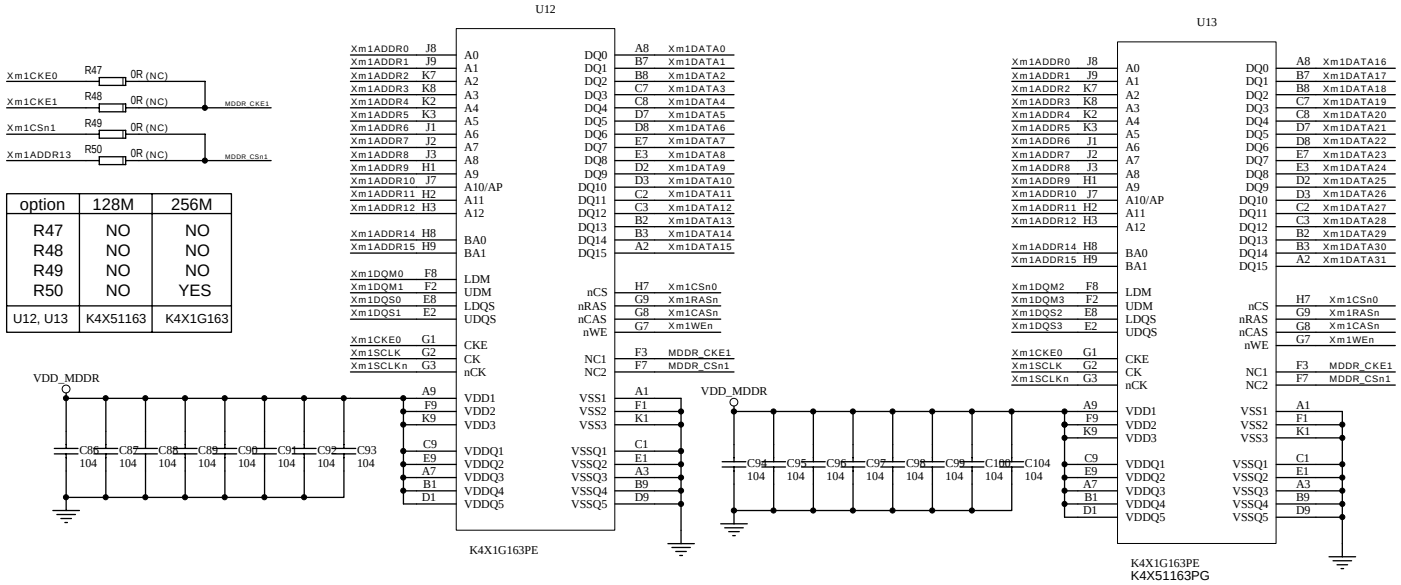

option	128M	256M
R47	NO	NO
R48	NO	NO
R49	NO	NO
R50	NO	YES
U12, U13	K4X51163	K4X1G163

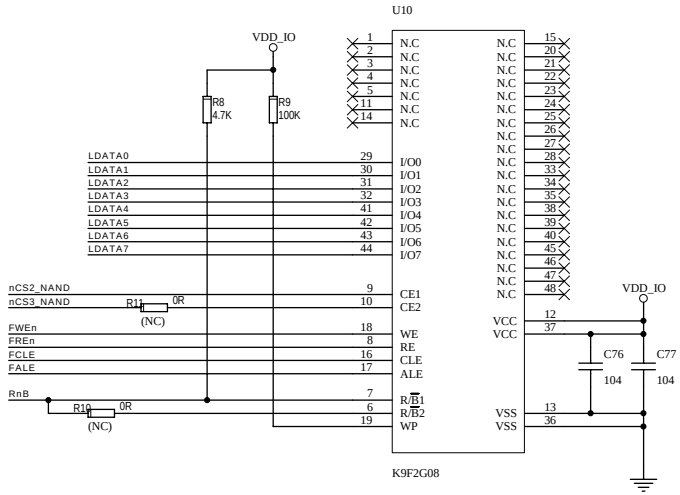

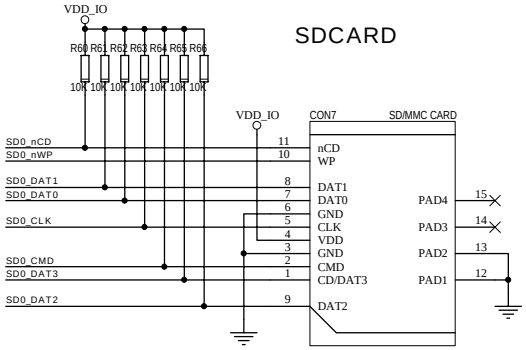

Designed by FriendlyARM in Guangzhou

All rights reserved | http://www.arm9.net

广州友善之臂计算机科技有限公司

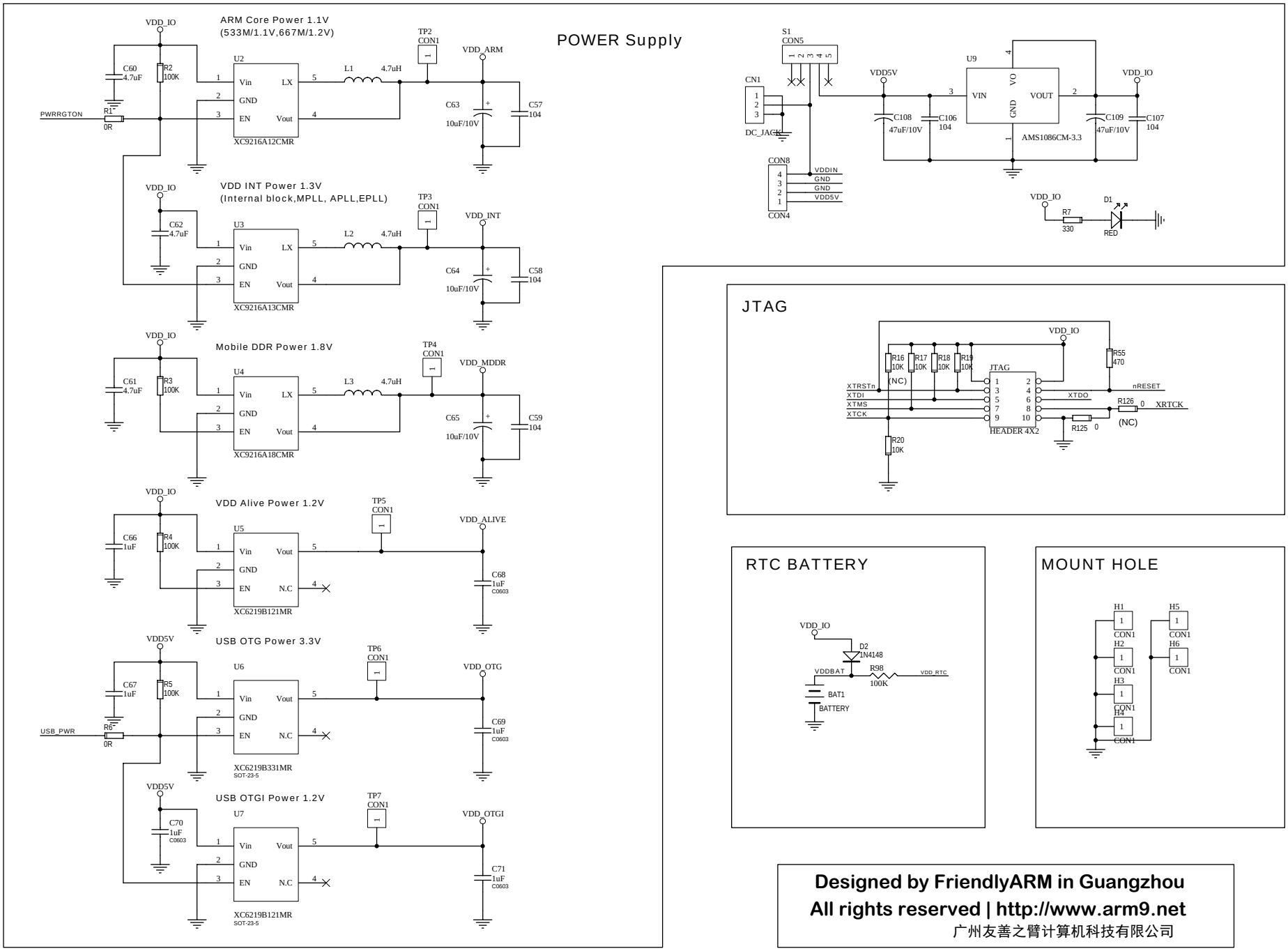
POWER Supply
ARM Core Power 1.1V
(533M/1.1V,667M/1.2V)
VDD_IO
C60 4.7uF
R2 100K
PWRRGTON
R1 0R
U2
Vin
GND
EN
LX
Vout
XC9216A12CMR
L1 4.7uH
TP2 CON1
VDD_ARM
C63 10uF/10V
C57 104
VDD INT Power 1.3V
(Internal block,MPLL, APLL,EPLL)
C62 4.7uF
U3
XC9216A13CMR
L2 4.7uH
TP3 CON1
VDD_INT
C64 10uF/10V
C58 104
Mobile DDR Power 1.8V
C61 4.7uF
R3 100K
U4
XC9216A18CMR
L3 4.7uH
TP4 CON1
VDD_MDDR
C65 10uF/10V
C59 104
VDD Alive Power 1.2V
C66 1uF
R4 100K
U5
N.C
XC6219B121MR
TP5 CON1
VDD_ALIVE
C68 1uF C0603
USB OTG Power 3.3V
VDD5V
C67 1uF
R5 100K
USB_PWR
R6 0R
U6
XC6219B331MR
SOT-23-5
TP6 CON1
VDD_OTG
C69 1uF C0603
USB OTGI Power 1.2V
C70 1uF C0603
U7
XC6219B121MR
SOT-23-5
TP7 CON1
VDD_OTGI
C71 1uF C0603
S1 CON5
CN1
DC_JACK
CON8
CON4
VDDIN
GND
VDD5V
U9
VIN
VOUT
VO
AMS1086CM-3.3
C108 47uF/10V
C106 104
C109 47uF/10V
C107 104
R7 330
D1 RED
JTAG
R16 10K
R17 10K
R18 10K
R19 10K
R20 10K
R55 470
(NC)
XTRSTn
XTDI
XTMS
XTCK
XTDO
nRESET
XRTCK
R126 0
R125 0
HEADER 4X2
RTC BATTERY
D2 1N4148
VDDBAT
R98 100K
VDD_RTC
BAT1
BATTERY
MOUNT HOLE
H1
H2
H3
H4
H5
H6
CON1
Designed by FriendlyARM in Guangzhou
All rights reserved | http://www.arm9.net
广州友善之臂计算机科技有限公司

UART0-3

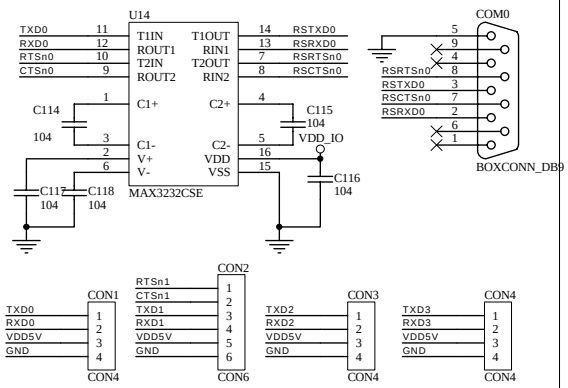

Buttons

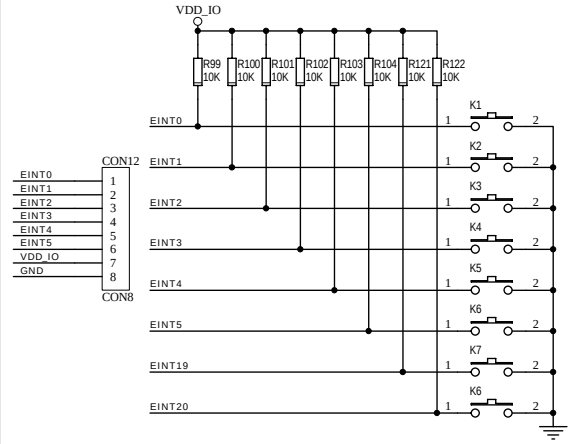

USB Slave/OTG

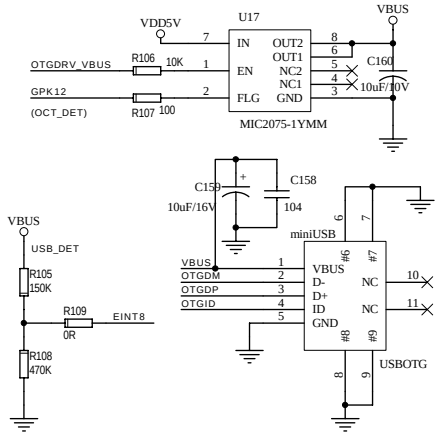

Designed by FriendlyARM in Guangzhou

All rights reserved | http://www.arm9.net

广州友善之臂计算机科技有限公司

USB Host

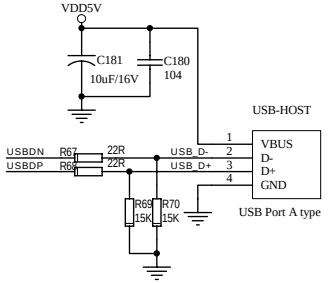

IR Receiver

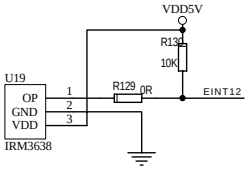

PWM Control Buzzer

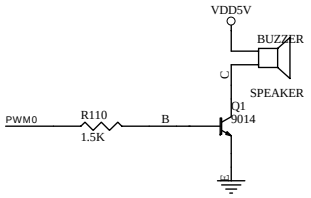

I2C-EEPROM

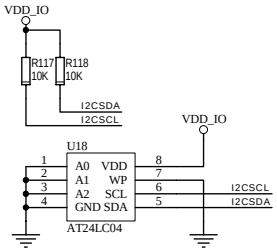

AD-Convert

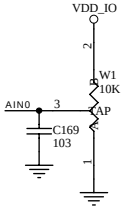

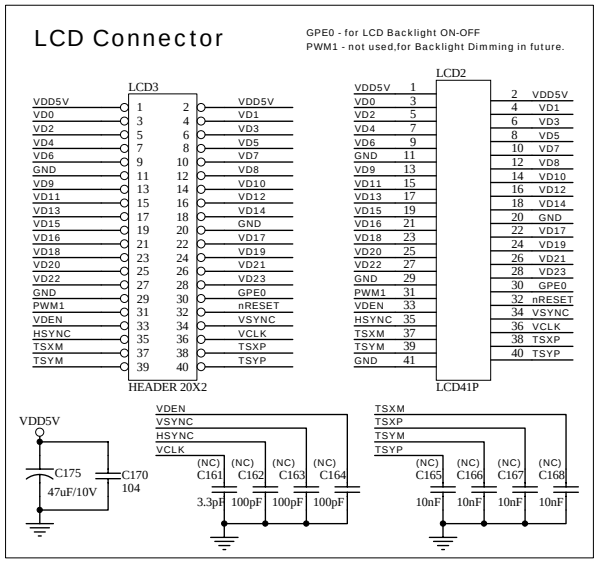
LCD Connector
GPE0 - for LCD Backlight ON-OFF
PWM1 - not used,for Backlight Dimming in future.
LCD3
HEADER 20X2
LCD2
LCD41P
VDD5V
C175
47uF/10V
C170
104
VDEN
VSYNC
HSYNC
VCLK
TSXM
TSXP
TSYM
TSYP
(NC) C161 3.3pF
(NC) C162 100pF
(NC) C163 100pF
(NC) C164 100pF
(NC) C165 10nF
(NC) C166 10nF
(NC) C167 10nF
(NC) C168 10nF

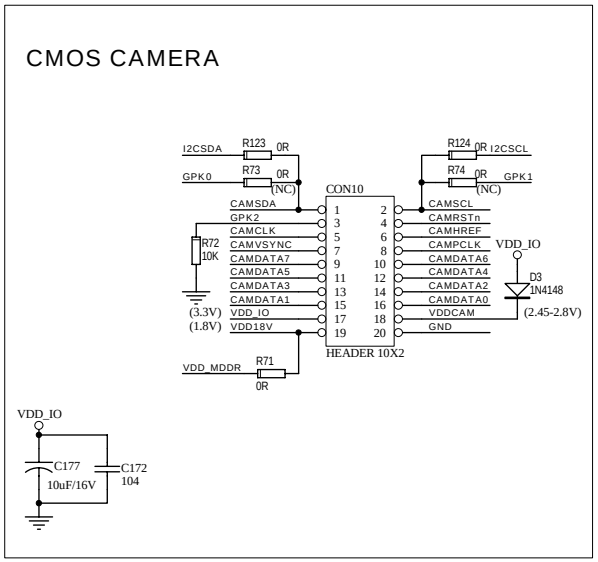
CMOS CAMERA
I2CSDA
R123 0R
GPK0
R73 0R
(NC)
R124 0R
I2CSCL
R74 0R
(NC)
GPK1
CON10
HEADER 10X2
CAMSDA
GPK2
CAMCLK
CAMVSYNC
CAMDATA7
CAMDATA5
CAMDATA3
CAMDATA1
VDD_IO
VDD18V
CAMSCL
CAMRSTn
CAMHREF
CAMPCLK
CAMDATA6
CAMDATA4
CAMDATA2
CAMDATA0
VDDCAM
GND
R72 10K
(3.3V)
(1.8V)
VDD_MDDR
R71 0R
D3 1N4148
(2.45-2.8V)
VDD_IO
C177 10uF/16V
C172 104

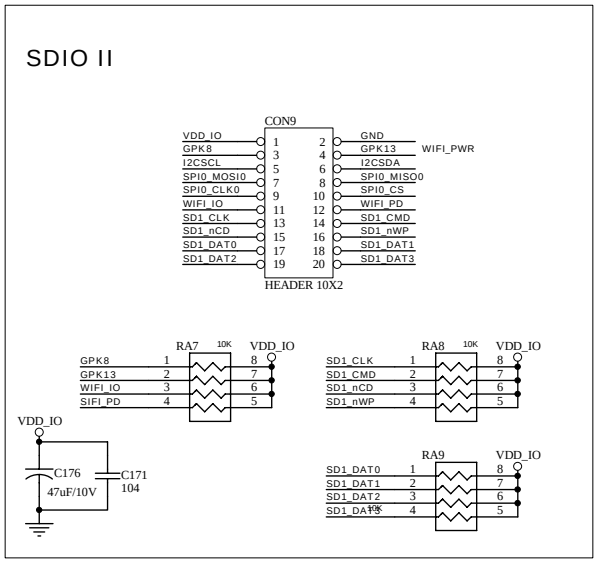
SDIO II
CON9
HEADER 10X2
VDD_IO
GPK8
I2CSCL
SPI0_MOSI
SPI0_CLK
WIFI_IO
SD1_CLK
SD1_nCD
SD1_DAT0
SD1_DAT2
GND
GPK13
I2CSDA
SPI0_MISO
SPI0_CS
WIFI_PD
SD1_CMD
SD1_nWP
SD1_DAT1
SD1_DAT3
WIFI_PWR
RA7 10K
GPK8
GPK13
WIFI_IO
SIFI_PD
RA8 10K
SD1_CLK
SD1_CMD
SD1_nCD
SD1_nWP
RA9 10K
SD1_DAT0
SD1_DAT1
SD1_DAT2
SD1_DAT3
C176 47uF/10V
C171 104

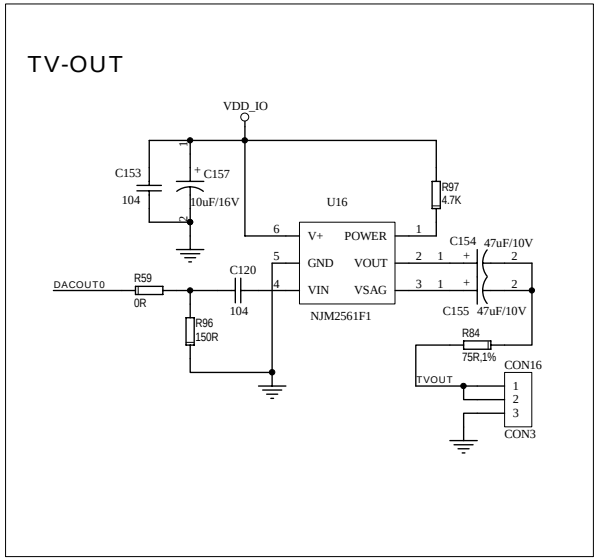
TV-OUT
VDD_IO
C153 104
C157 10uF/16V
U16
R97 4.7K
V+
POWER
GND
VOUT
VIN
VSAG
NJM2561F1
C154 47uF/10V
C155 47uF/10V
DACOUT0
R59 0R
C120 104
R96 150R
R84 75R,1%
TVOUT
CON16
CON3

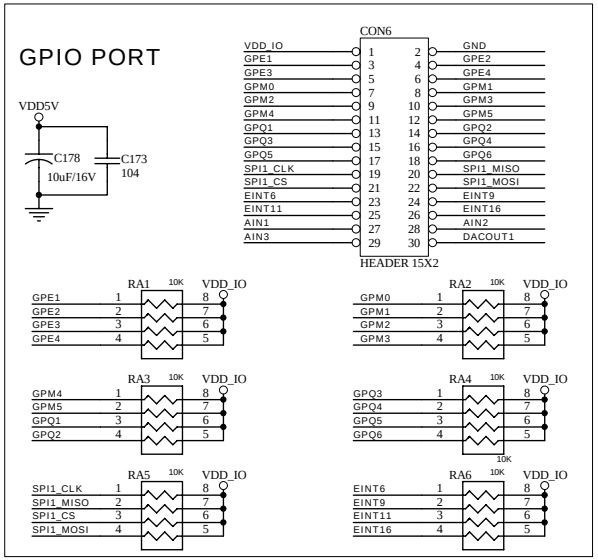
GPIO PORT
VDD5V
C178 10uF/16V
C173 104
CON6
HEADER 15X2
VDD_IO
GPE1
GPE3
GPM0
GPM2
GPM4
GPQ1
GPQ3
GPQ5
SPI1_CLK
SPI1_CS
EINT6
EINT11
AIN1
AIN3
GND
GPE2
GPE4
GPM1
GPM3
GPM5
GPQ2
GPQ4
GPQ6
SPI1_MISO
SPI1_MOSI
EINT9
EINT16
AIN2
DACOUT1
RA1 10K
RA2 10K
RA3 10K
RA4 10K
RA5 10K
RA6 10K
GPE1
GPE2
GPE3
GPE4
GPM0
GPM1
GPM2
GPM3
GPM4
GPM5
GPQ1
GPQ2
GPQ3
GPQ4
GPQ5
GPQ6
SPI1_CLK
SPI1_MISO
SPI1_CS
SPI1_MOSI
EINT6
EINT9
EINT11
EINT16

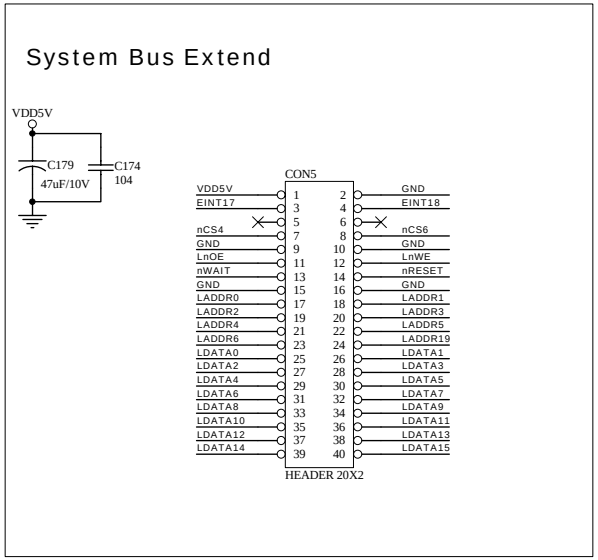
System Bus Extend
VDD5V
C179 47uF/10V
C174 104
CON5
HEADER 20X2
VDD5V
EINT17
nCS4
GND
LnOE
nWAIT
GND
LADDR0
LADDR2
LADDR4
LADDR6
LDATA0
LDATA2
LDATA4
LDATA6
LDATA8
LDATA10
LDATA12
LDATA14
GND
EINT18
nCS6
GND
LnWE
nRESET
GND
LADDR1
LADDR3
LADDR5
LADDR19
LDATA1
LDATA3
LDATA5
LDATA7
LDATA9
LDATA11
LDATA13
LDATA15

NET: DM9000AEP

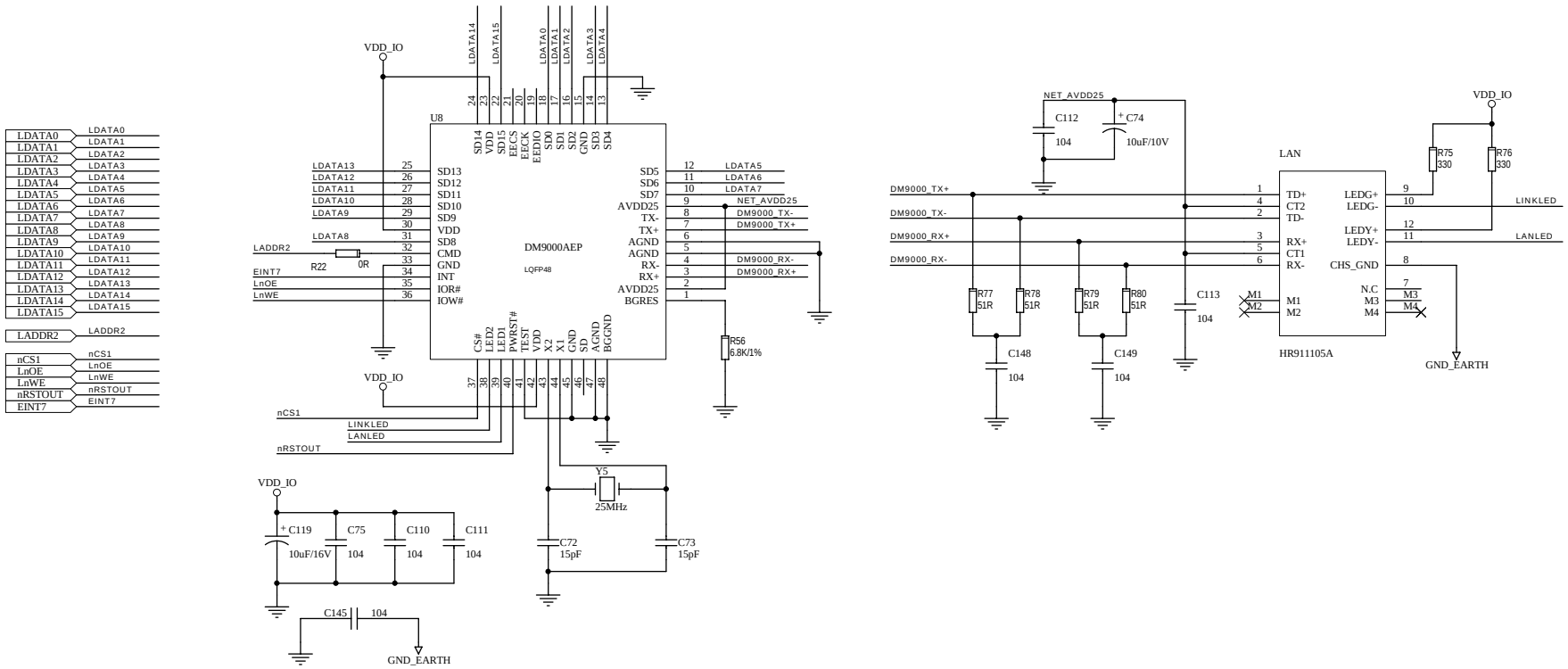

Designed by FriendlyARM in Guangzhou

All rights reserved | http://www.arm9.net

广州友善之臂计算机科技有限公司

Audio Codec

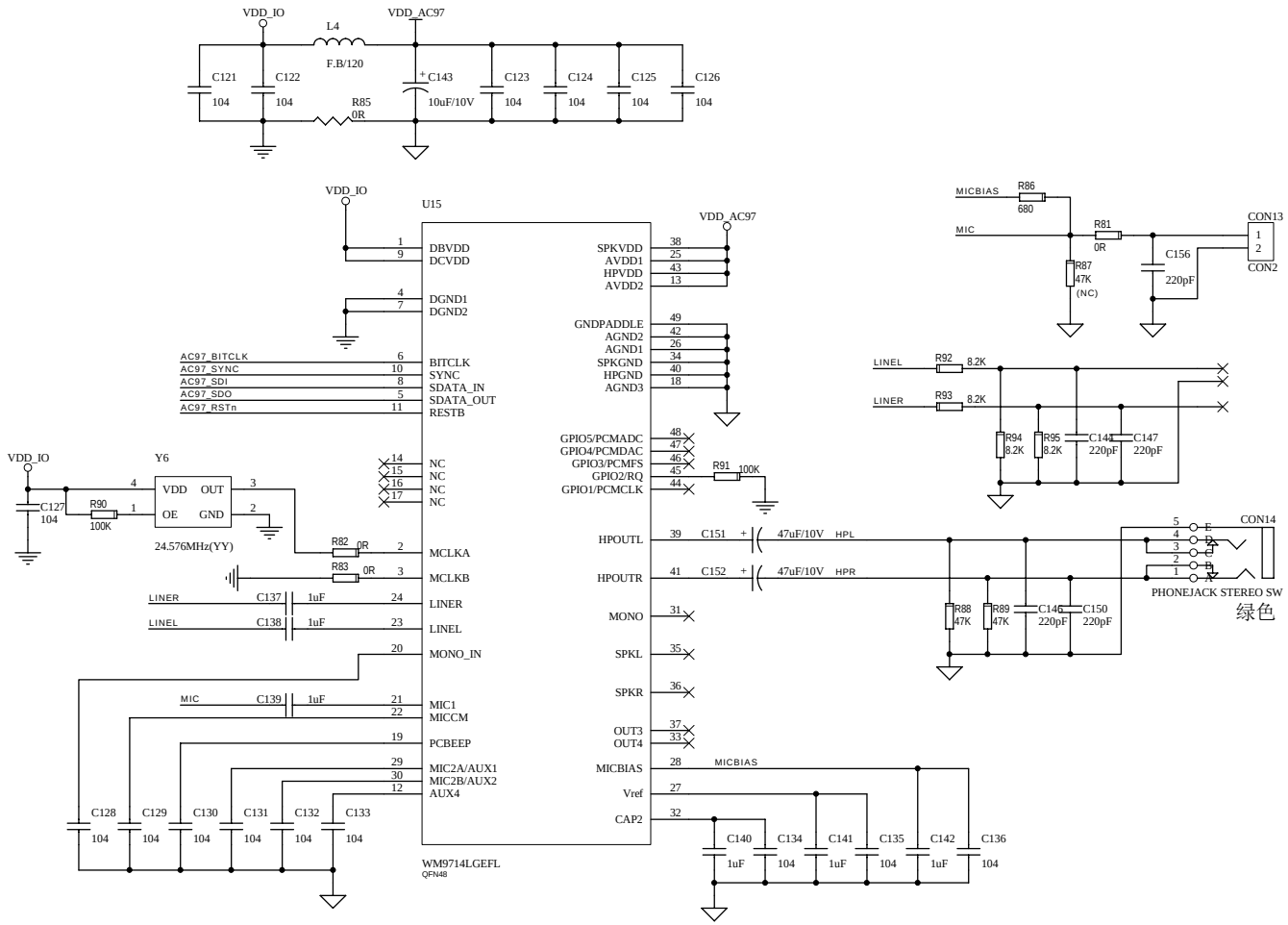

Designed by FriendlyARM in Guangzhou

All rights reserved | http://www.arm9.net

广州友善之臂计算机科技有限公司