01_S3C6410(addr_data)
01_S3C6410(addr_data)

09_AC97
09_AC97

02_S3C6410(IO 1)
02_S3C6410(IO 1)

10_Power_JTAG
10_Power_JTAG

03_S3C6410(IO 2)
03_S3C6410(IO 2)

04_S3C6410(Power)
04_S3C6410(Power)

Mini6410

Ver:1016

05_Memory
05_Memory

Designed by FriendlyARM in Guangzhou
All rights reserved | http://www.arm9.net
广州友善之臂计算机科技有限公司

06_USB_UART_AD_BUTTONS_PWM_IR_I2C
06_USB_UART_AD_BUTTONS_PWM_IR_I2C

07_LCD_CMOS_GPIO_SD2
07_LCD_CMOS_GPIO_SD2

08_DM9000
08_DM9000

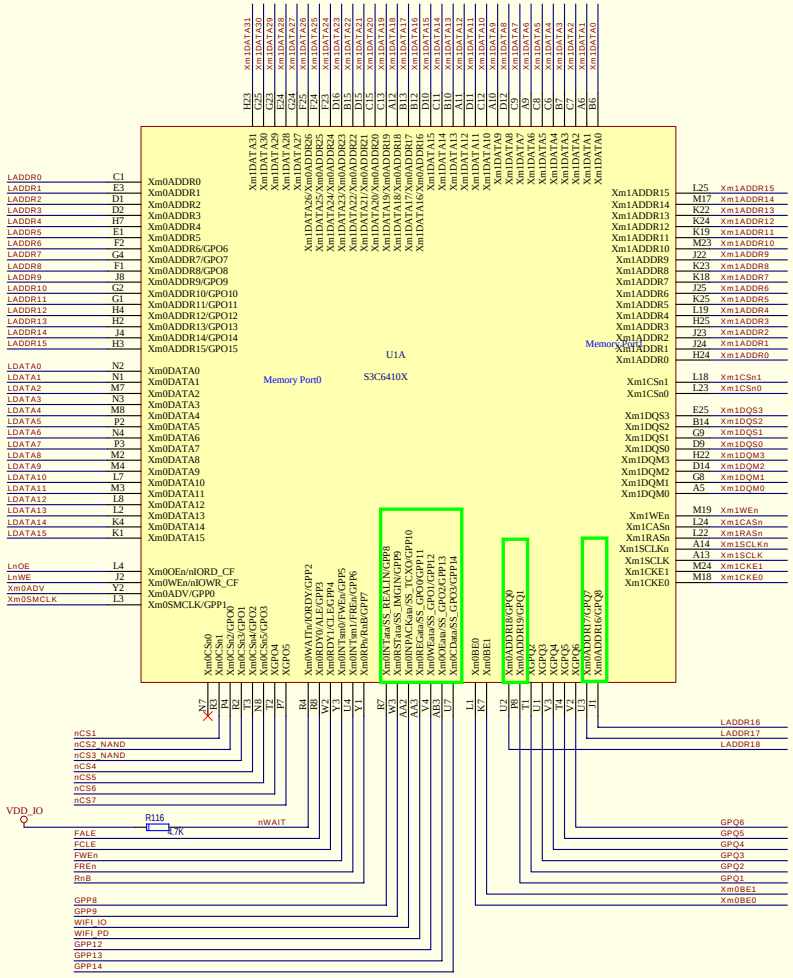

Designed by FriendlyARM in Guangzhou

All rights reserved | http://www.arm9.net

广州友善之臂计算机科技有限公司

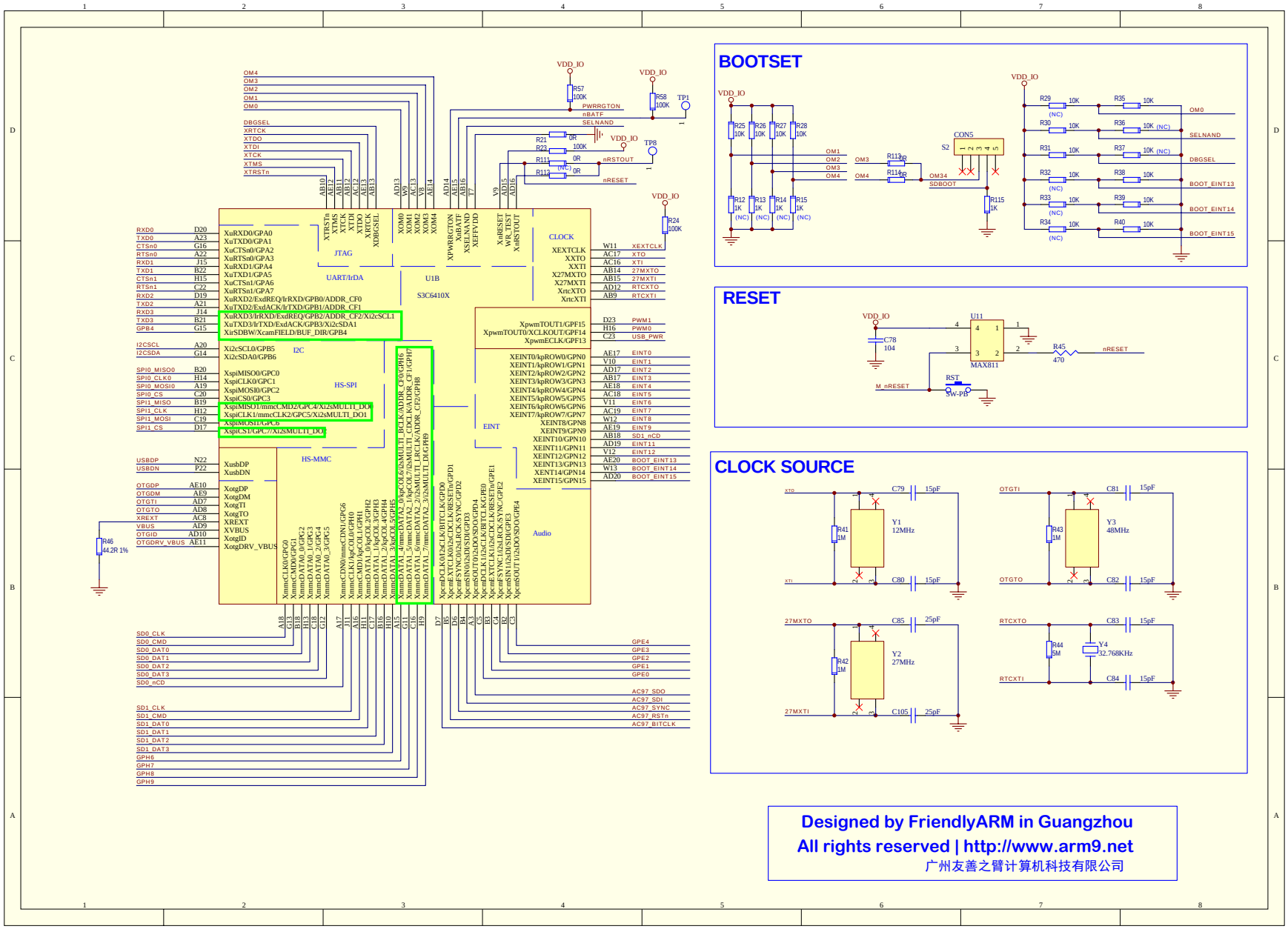
BOOTSET
RESET
CLOCK SOURCE
U1B
S3C6410X
JTAG
UART/IrDA
I2C
HS-SPI
HS-MMC
CLOCK
EINT
Audio
U11
MAX811
CON5
S2
Y1 12MHz
Y2 27MHz
Y3 48MHz
Y4 32.768KHz
Designed by FriendlyARM in Guangzhou
All rights reserved | http://www.arm9.net
广州友善之臂计算机科技有限公司

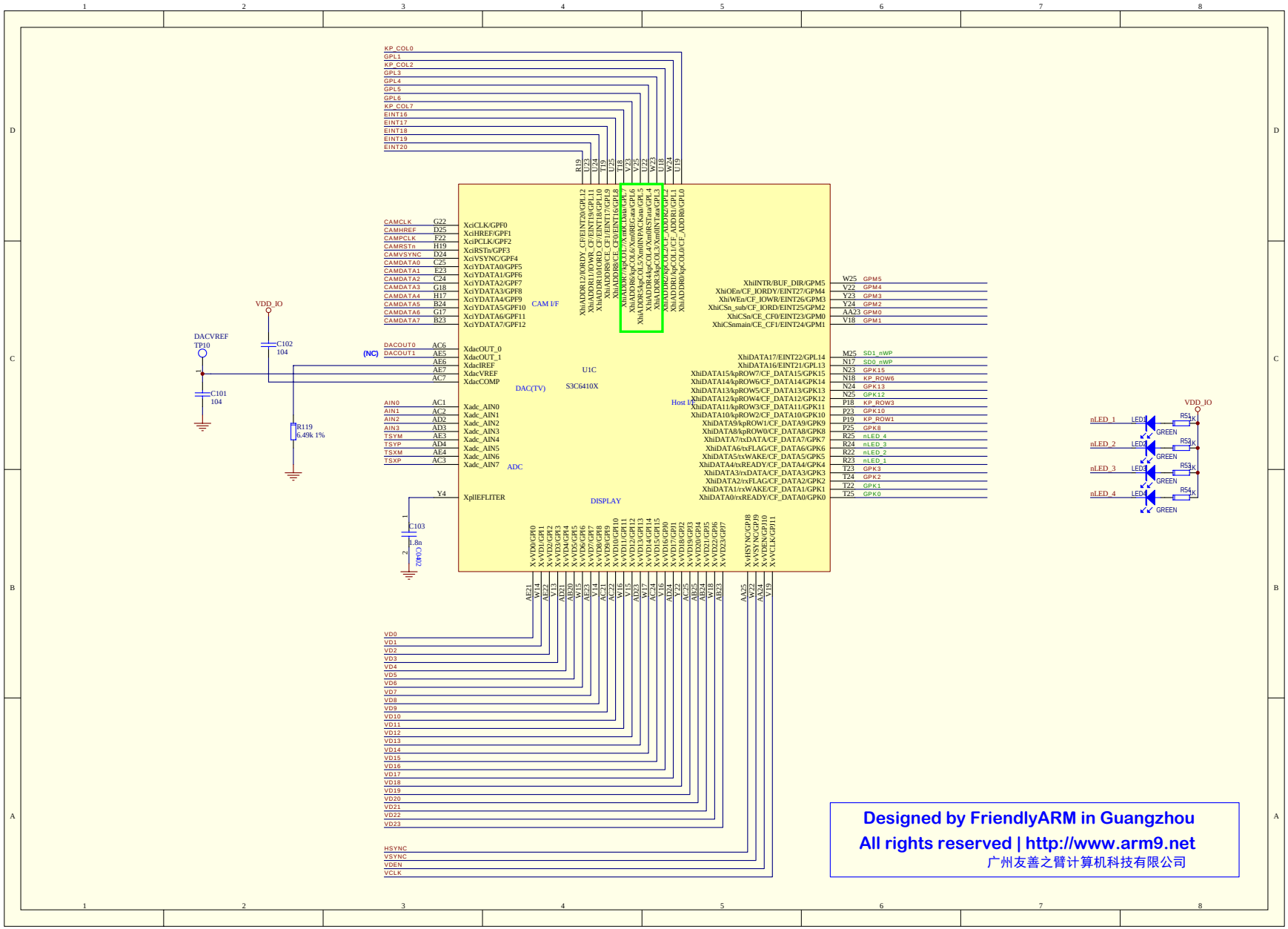

Designed by FriendlyARM in Guangzhou
All rights reserved | http://www.arm9.net
广州友善之臂计算机科技有限公司

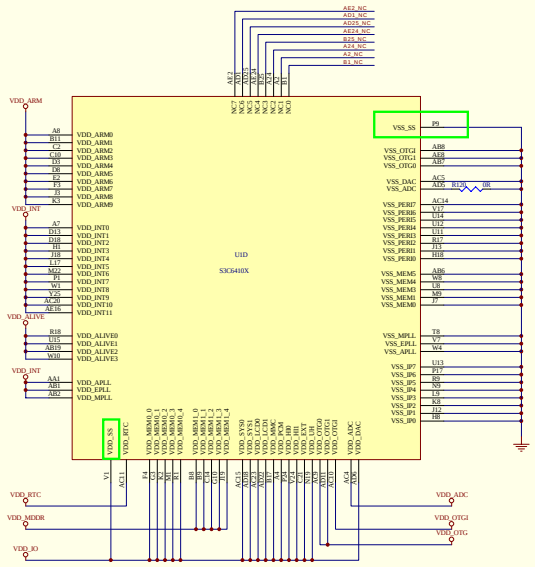

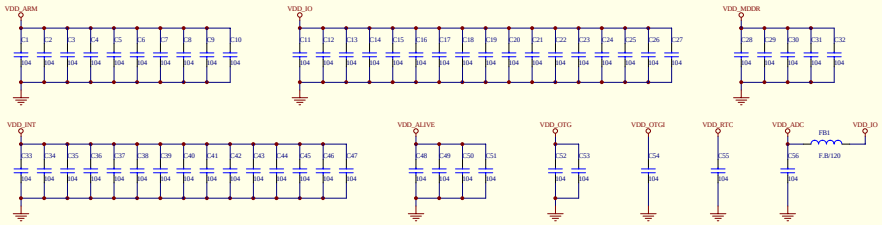

Designed by FriendlyARM in Guangzhou
All rights reserved | http://www.arm9.net
广州友善之臂计算机科技有限公司

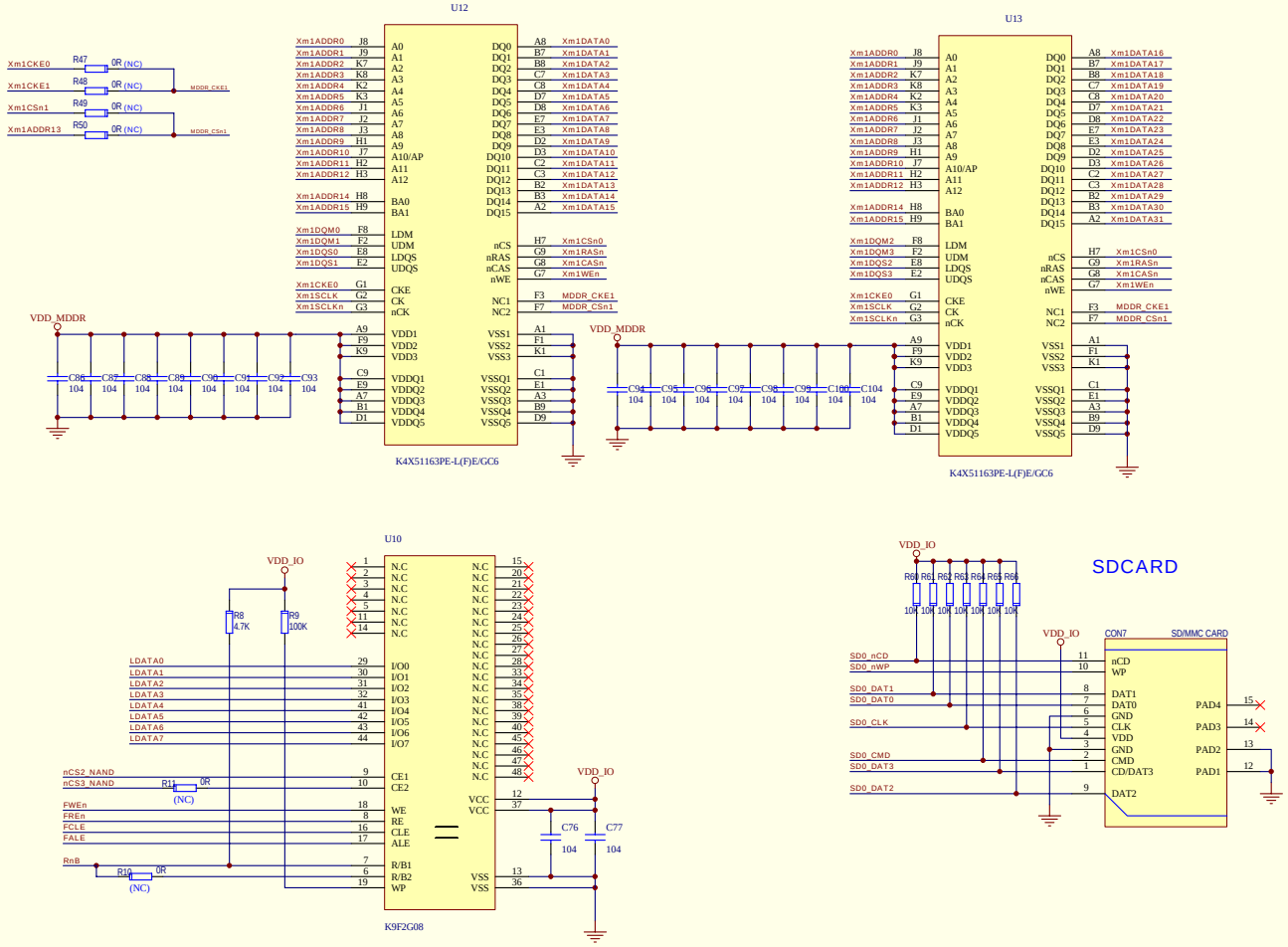

Designed by FriendlyARM in Guangzhou
All rights reserved | http://www.arm9.net
广州友善之臂计算机科技有限公司

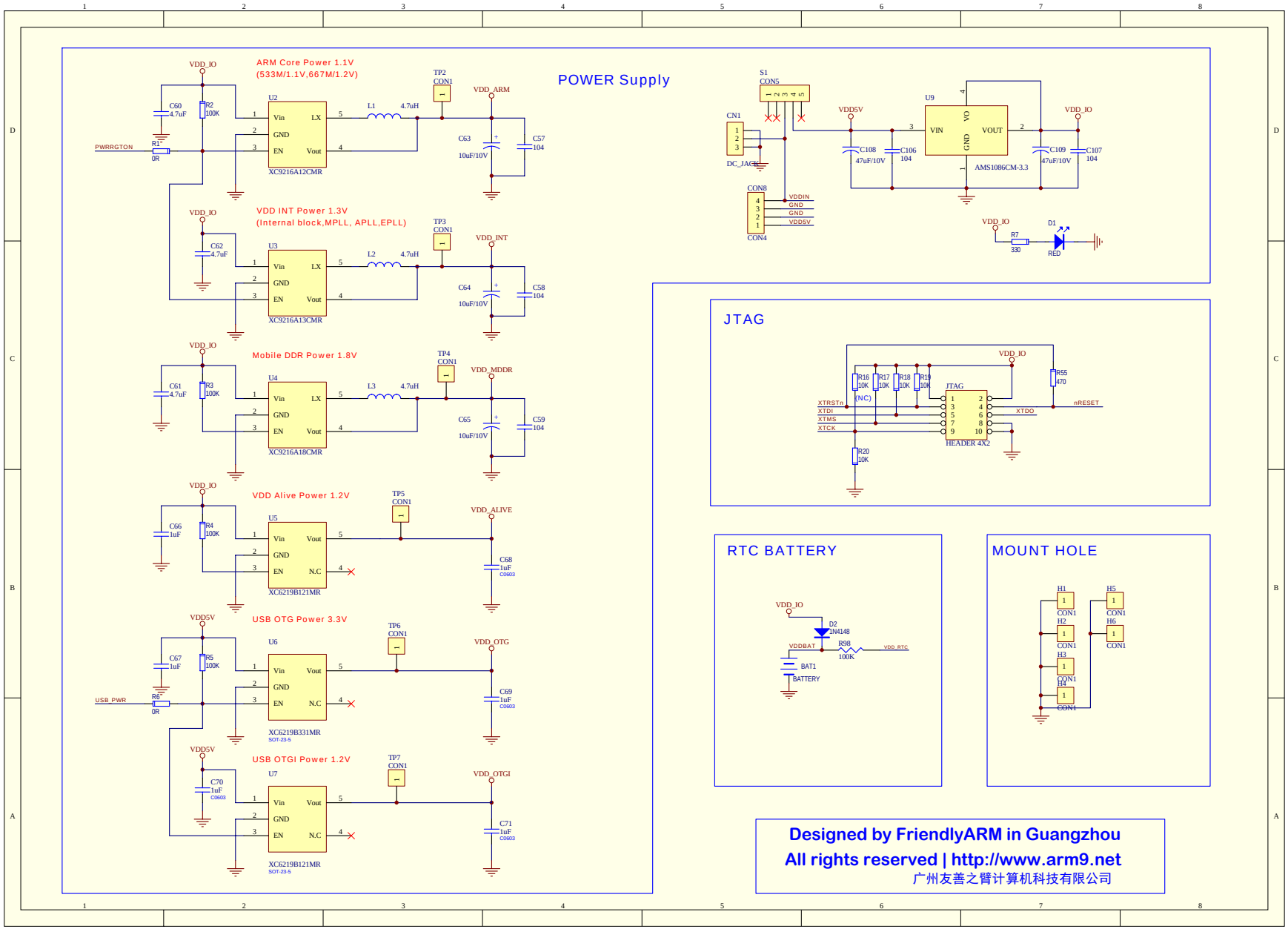
POWER Supply
ARM Core Power 1.1V
(533M/1.1V,667M/1.2V)
VDD_IO
C60 4.7uF
R2 100K
PWRRGTON
R1 0R
U2
Vin LX GND EN Vout
XC9216A12CMR
L1 4.7uH
TP2 CON1
VDD_ARM
C63 10uF/10V
C57 104
VDD INT Power 1.3V
(Internal block,MPLL, APLL,EPLL)
C62 4.7uF
U3
XC9216A13CMR
L2 4.7uH
TP3 CON1
VDD_INT
C64 10uF/10V
C58 104
Mobile DDR Power 1.8V
C61 4.7uF
R3 100K
U4
XC9216A18CMR
L3 4.7uH
TP4 CON1
VDD_MDDR
C65 10uF/10V
C59 104
VDD Alive Power 1.2V
C66 1uF
R4 100K
U5
Vin Vout GND EN N.C
XC6219B121MR
TP5 CON1
VDD_ALIVE
C68 1uF C0603
USB OTG Power 3.3V
VDD5V
C67 1uF
R5 100K
USB_PWR
R6 0R
U6
XC6219B331MR
SOT-23-5
TP6 CON1
VDD_OTG
C69 1uF C0603
USB OTGI Power 1.2V
C70 1uF C0603
U7
XC6219B121MR
SOT-23-5
TP7 CON1
VDD_OTGI
C71 1uF C0603
S1 CON5
CN1
DC_JACK
CON8
CON4
VDDIN
GND
GND
VDD5V
U9
VIN VOUT VO GND
AMS1086CM-3.3
C108 47uF/10V
C106 104
C109 47uF/10V
C107 104
R7 330
D1 RED
JTAG
R16 10K
R17 10K
R18 10K
R19 10K
(NC)
XTRSTn
XTDI
XTMS
XTCK
R20 10K
R55 470
nRESET
XTDO
HEADER 4X2
RTC BATTERY
D2 1N4148
VDDBAT
R98 100K
VDD_RTC
BAT1
BATTERY
MOUNT HOLE
H1 CON1
H2 CON1
H3 CON1
H4 CON1
H5 CON1
H6 CON1
Designed by FriendlyARM in Guangzhou
All rights reserved | http://www.arm9.net
广州友善之臂计算机科技有限公司

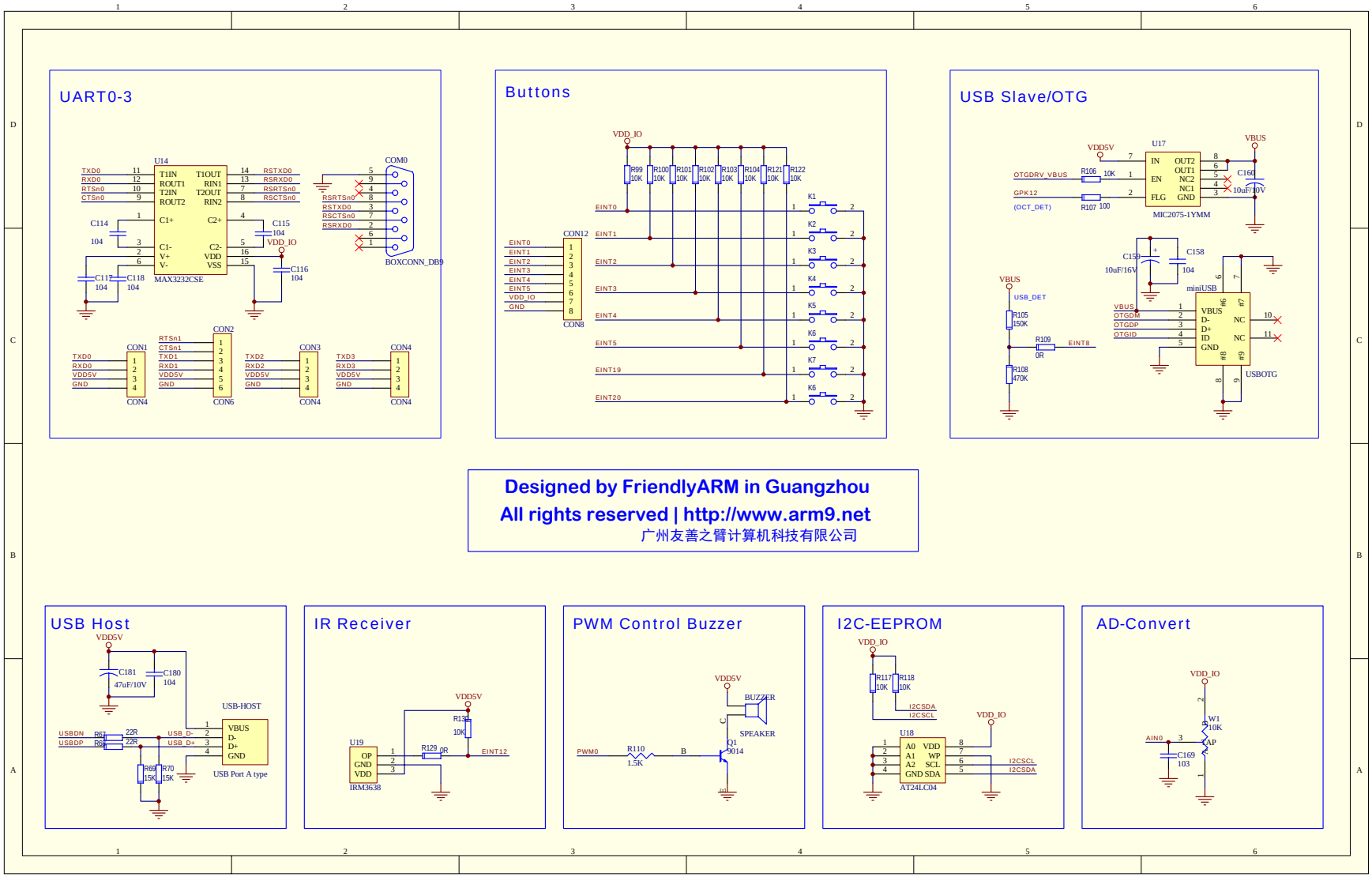
UART0-3
U14
MAX3232CSE
COM0
BOXCONN_DB9
CON1
CON2
CON3
CON4
CON6
Buttons
CON12
CON8
USB Slave/OTG
U17
MIC2075-1YMM
miniUSB
USBOTG
Designed by FriendlyARM in Guangzhou
All rights reserved | http://www.arm9.net
广州友善之臂计算机科技有限公司
USB Host
USB-HOST
USB Port A type
IR Receiver
U19
IRM3638
PWM Control Buzzer
BUZZER
SPEAKER
I2C-EEPROM
U18
AT24LC04
AD-Convert

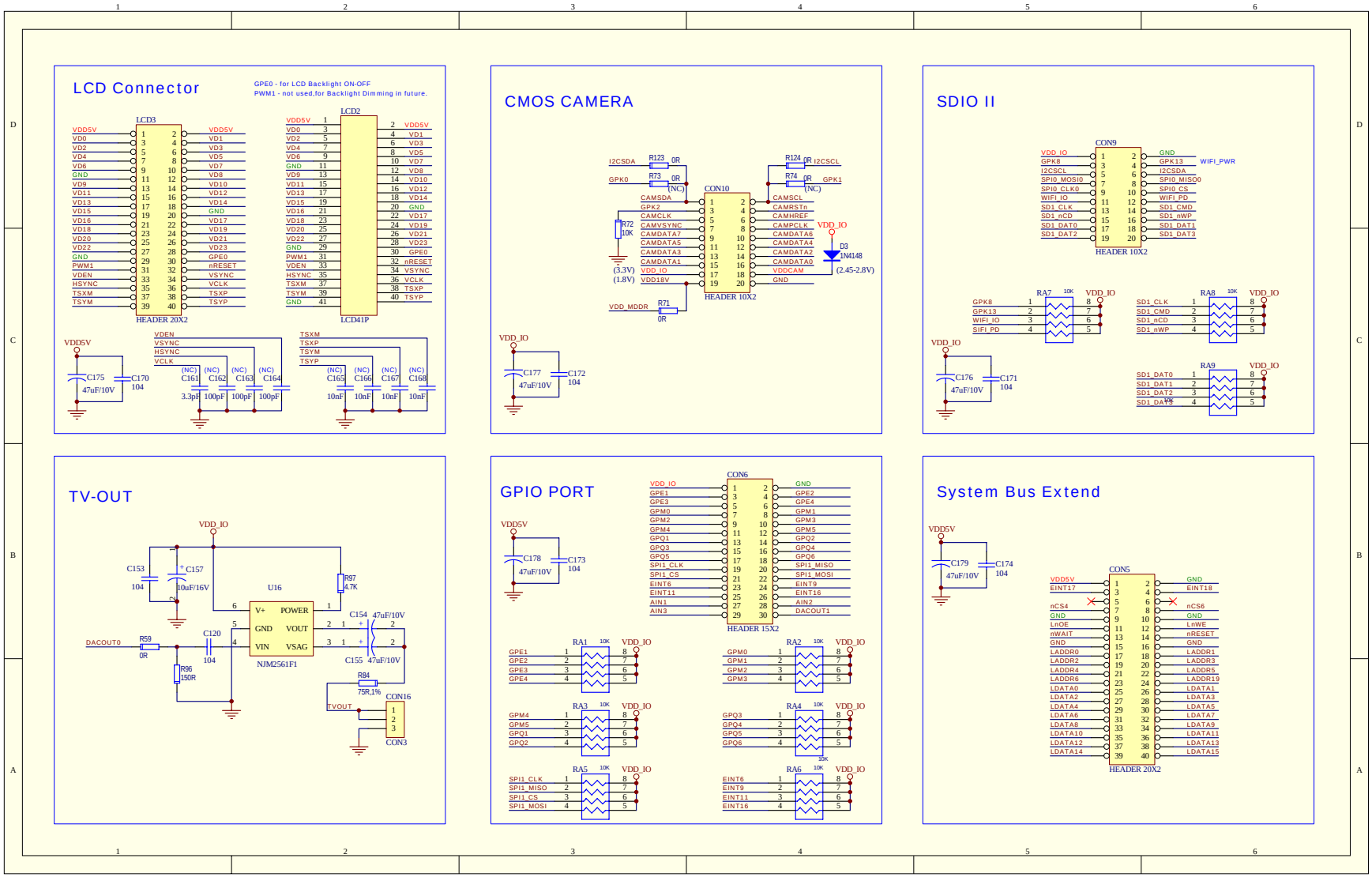
LCD Connector
GPE0 - for LCD Backlight ON-OFF
PWM1 - not used,for Backlight Dimming in future.
LCD3
HEADER 20X2
LCD2
LCD41P
CMOS CAMERA
CON10
HEADER 10X2
SDIO II
CON9
HEADER 10X2
TV-OUT
U16
NJM2561F1
CON16
CON3
GPIO PORT
CON6
HEADER 15X2
System Bus Extend
CON5
HEADER 20X2

NET: DM9000AEP

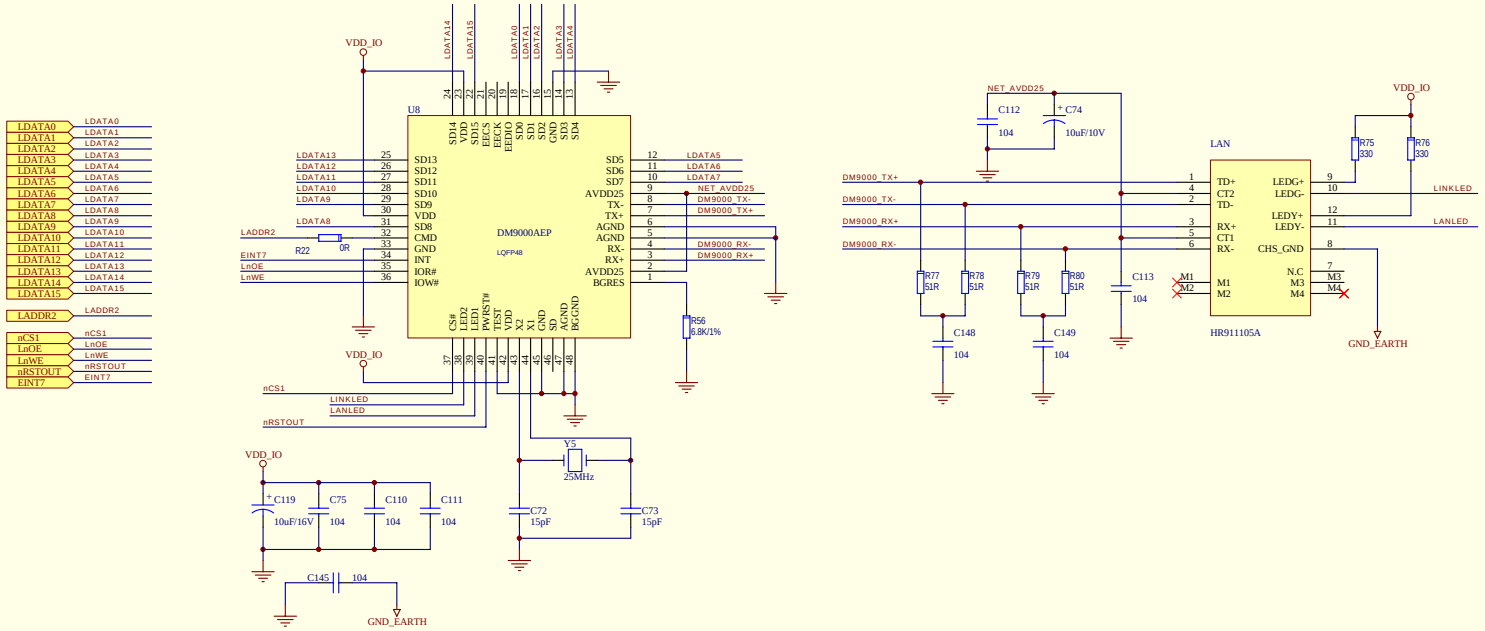

Designed by FriendlyARM in Guangzhou

All rights reserved | http://www.arm9.net

广州友善之臂计算机科技有限公司

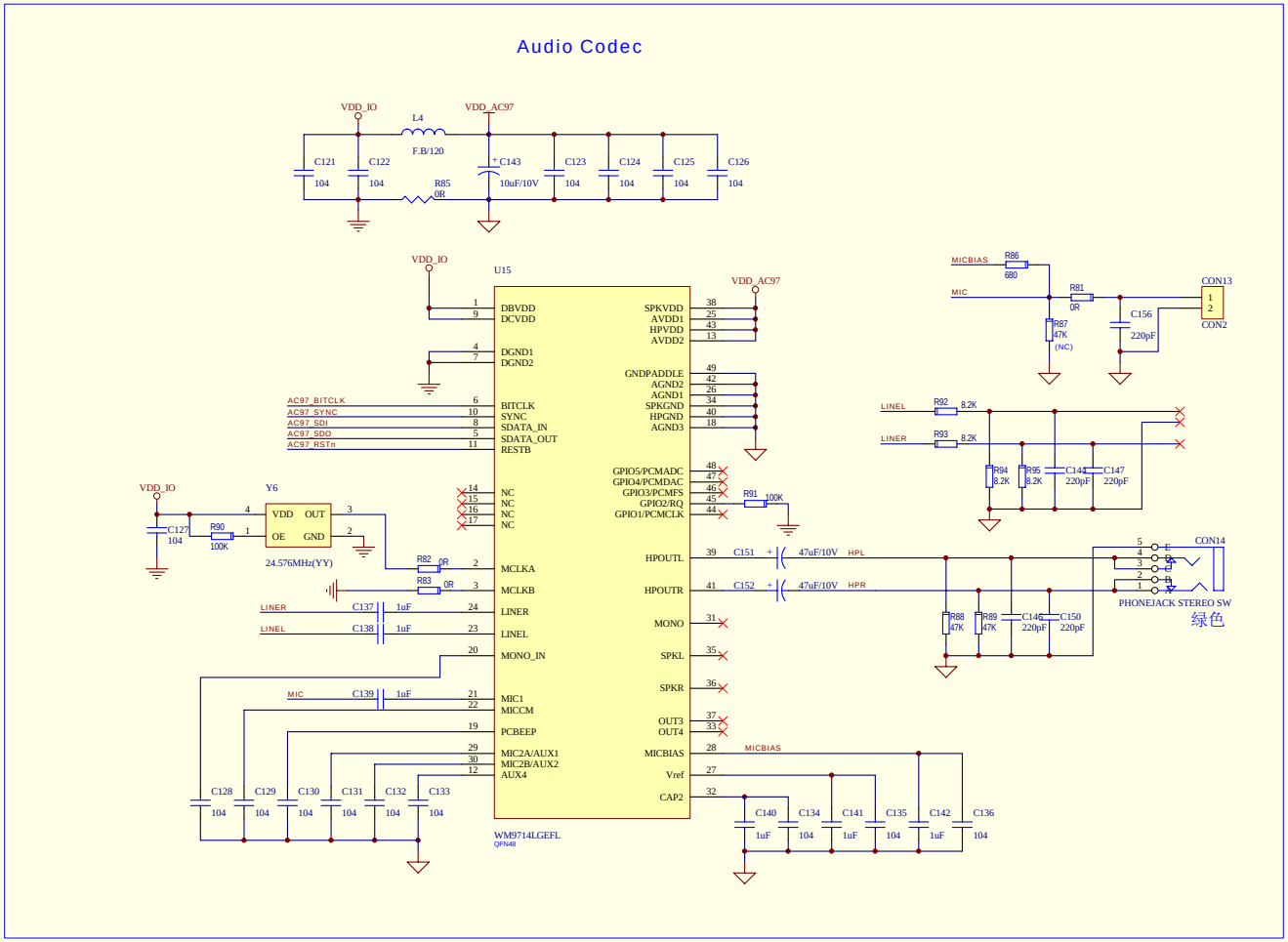

Designed by FriendlyARM in Guangzhou

All rights reserved | http://www.arm9.net

广州友善之臂计算机科技有限公司