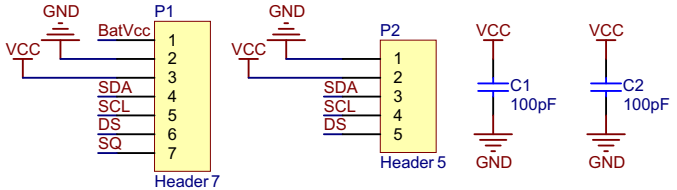
GND
VCC
P1
BatVcc
1
2
3
4
5
6
7
SDA
SCL
DS
SQ
Header 7
GND
VCC
P2
1
2
3
4
5
SDA
SCL
DS
Header 5
VCC
C1
100pF
GND
VCC
C2
100pF
GND

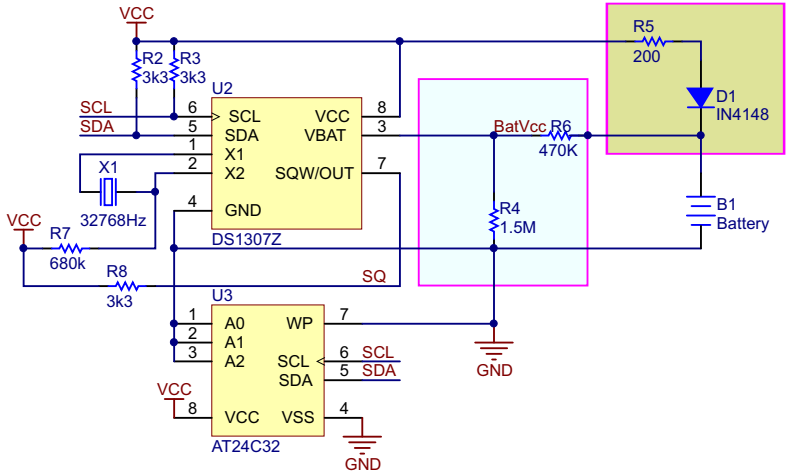
VCC
R2
3k3
R3
3k3
U2
SCL
SDA
SCL
SDA
X1
X2
GND
VCC
VBAT
SQW/OUT
X1
32768Hz
VCC
R7
680k
R8
3k3
DS1307Z
SQ
R5
200
D1
IN4148
BatVcc
R6
470K
R4
1.5M
B1
Battery
GND
U3
A0
A1
A2
WP
SCL
SDA
VCC
VSS
SCL
SDA
VCC
AT24C32
GND